DERAKO®
A Hunter Douglas Company

Product details Linear open ceiling system

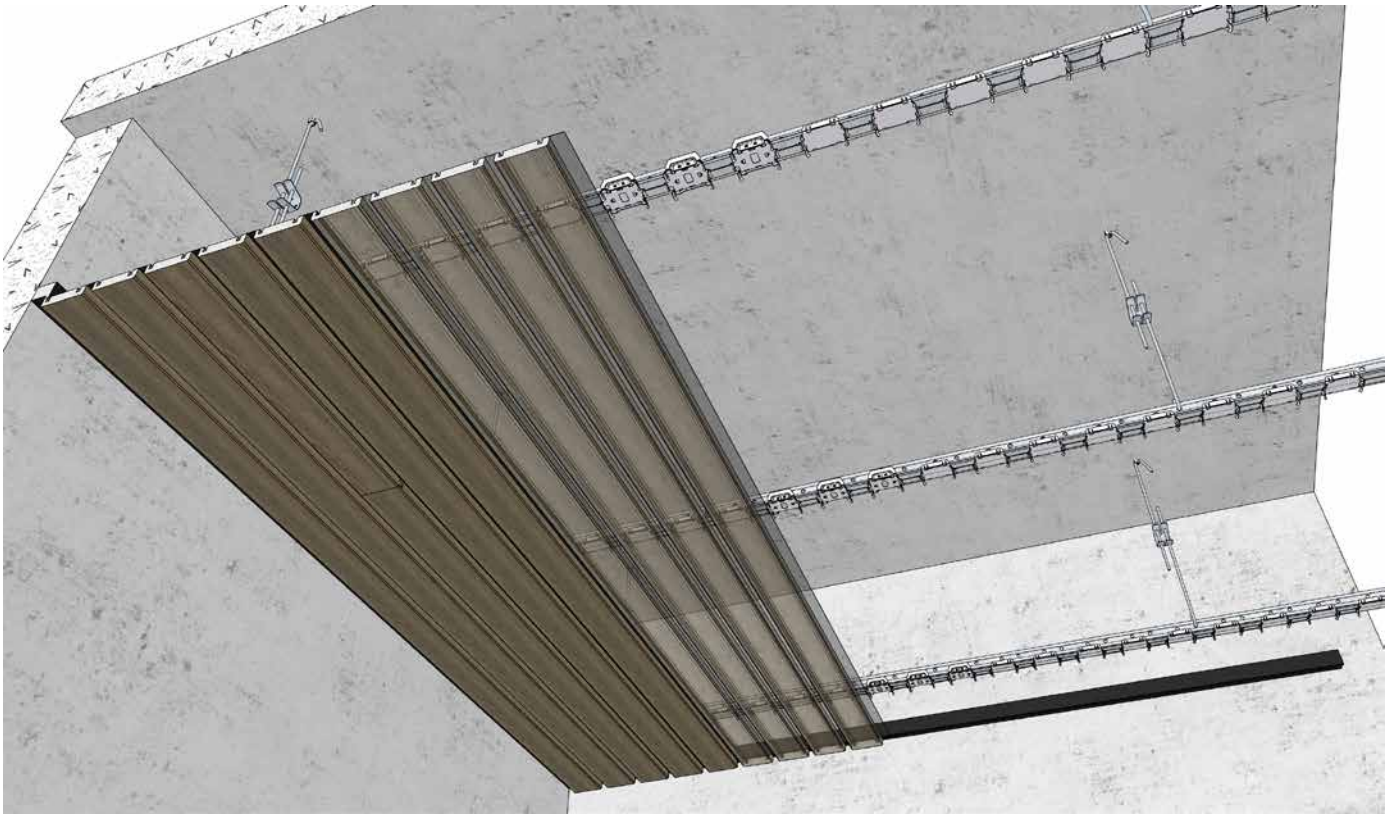

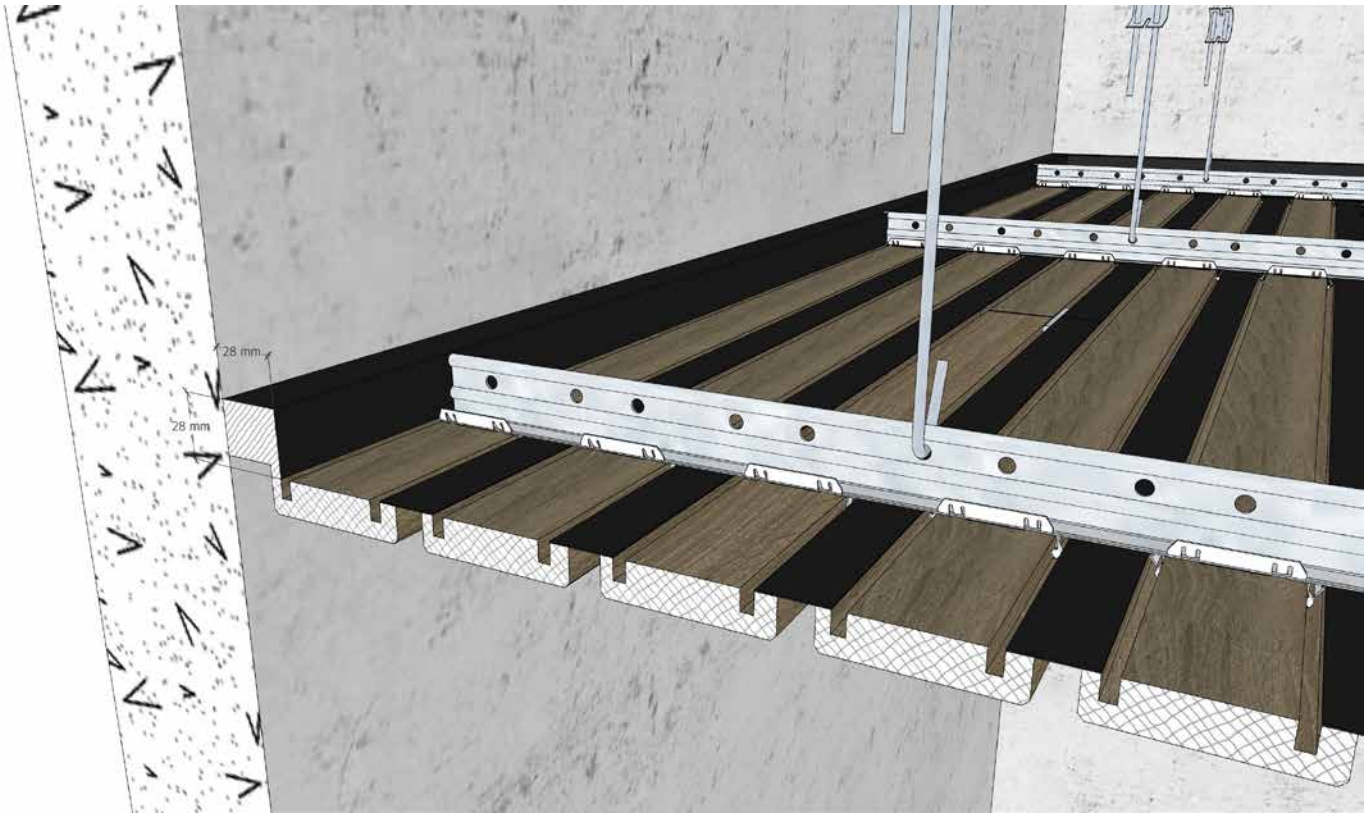

DERAKO®
A Hunter Douglas Company

Product details Linear open ceiling system

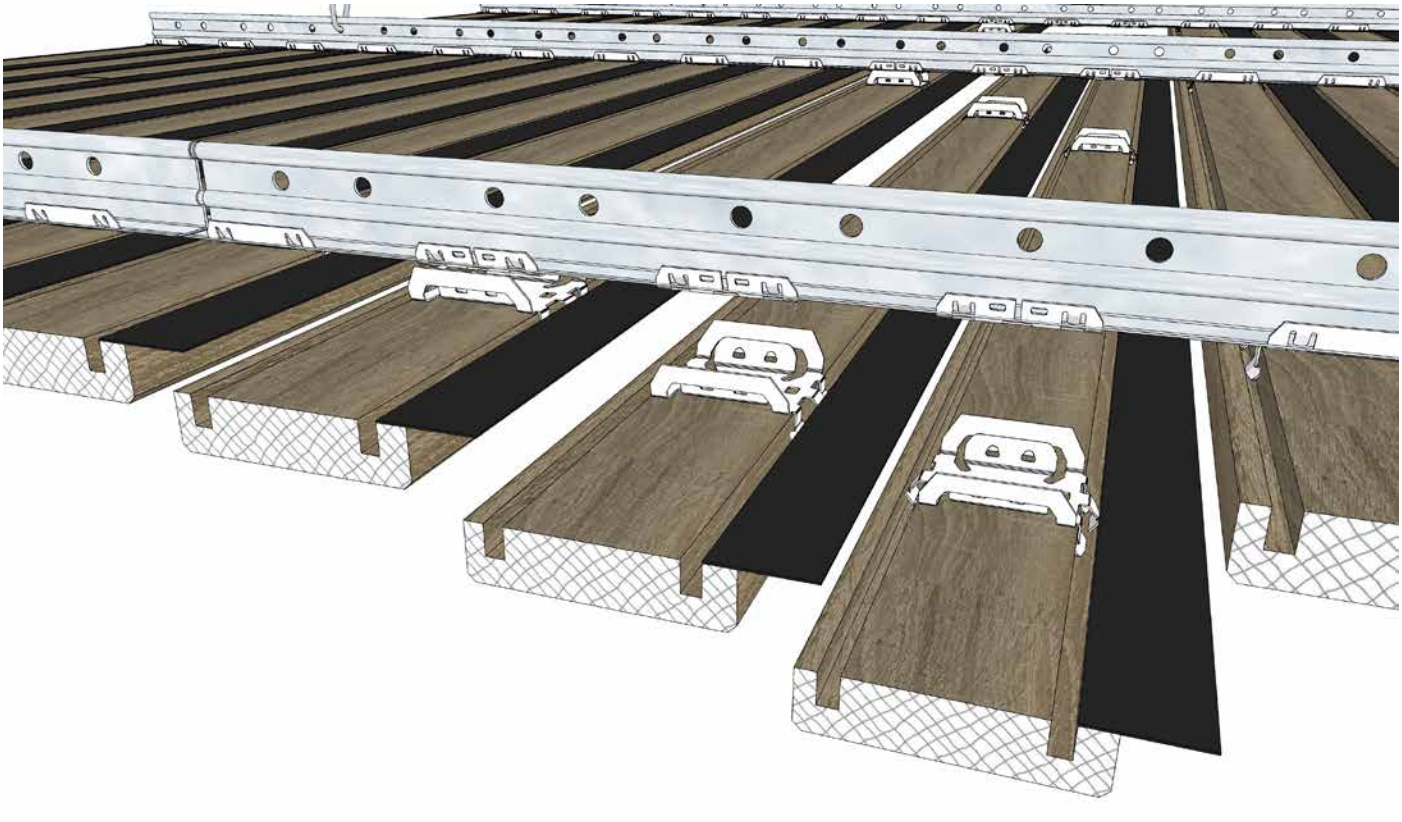

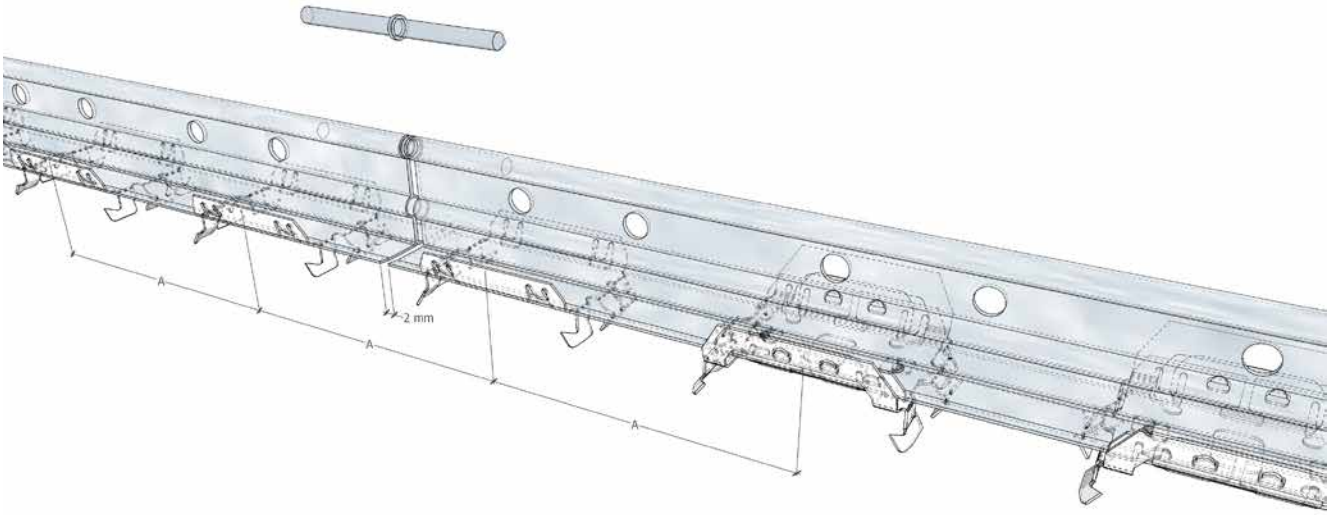

DERAKO®
A Hunter Douglas Company
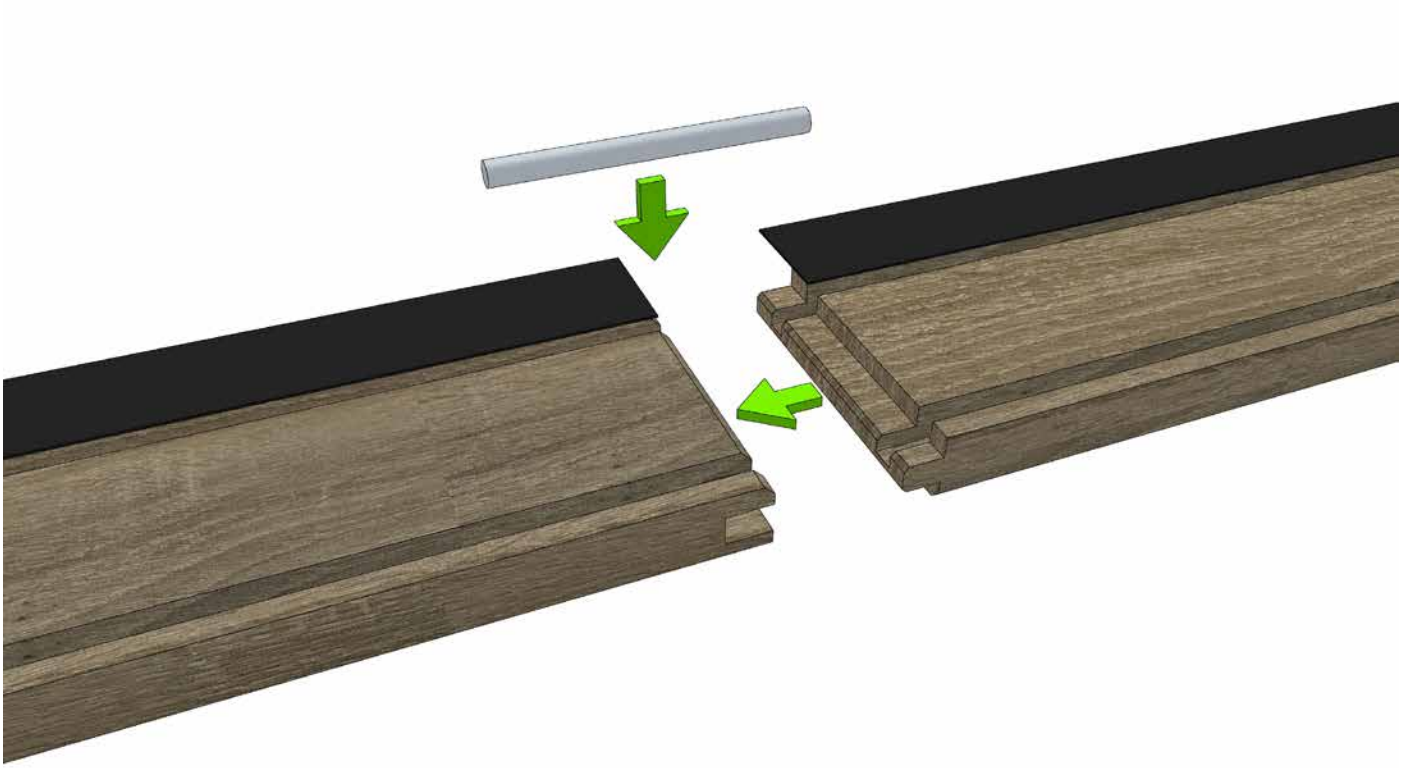
Product details Linear open ceiling system