DERAKO®
A Hunter Douglas Company

Product details Grill ceiling system

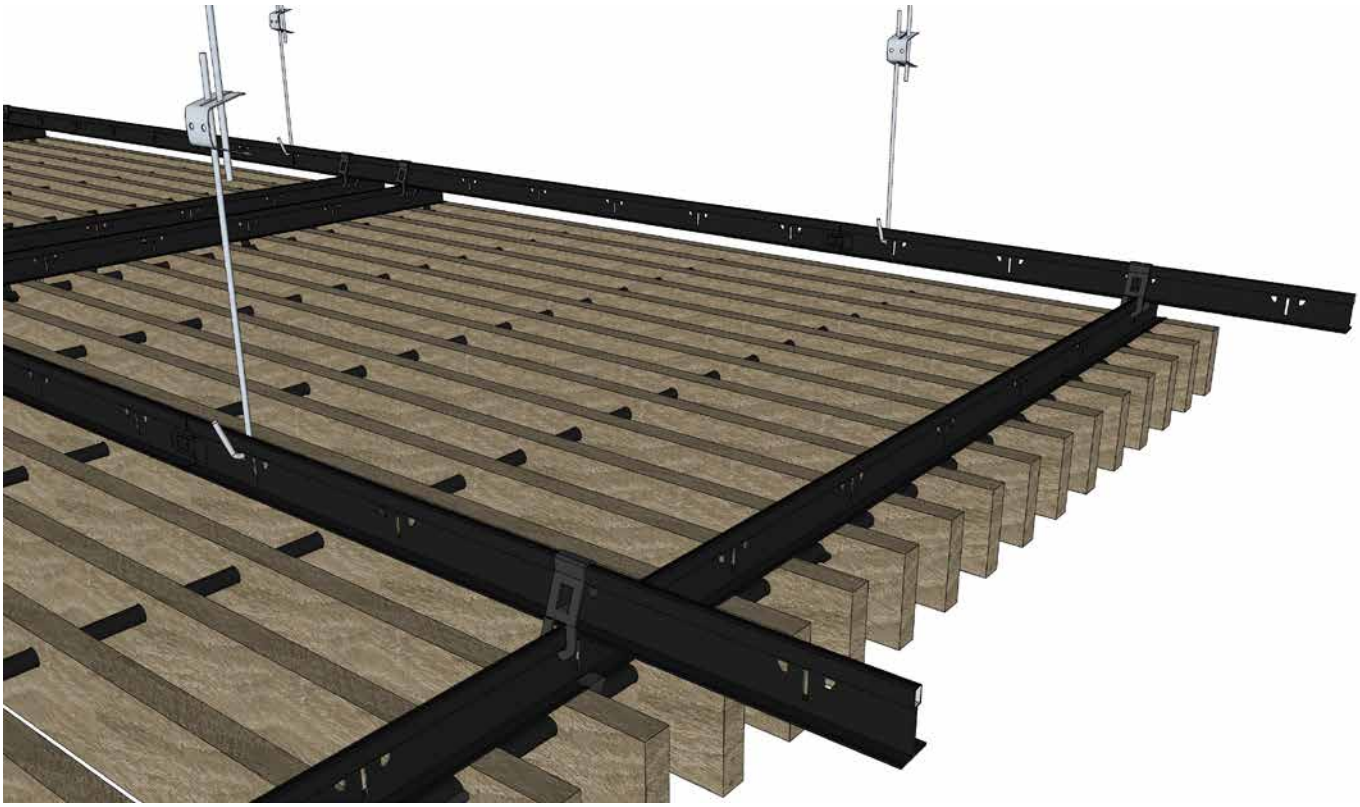

DERAKO®
A Hunter Douglas Company

Product details Grill ceiling system

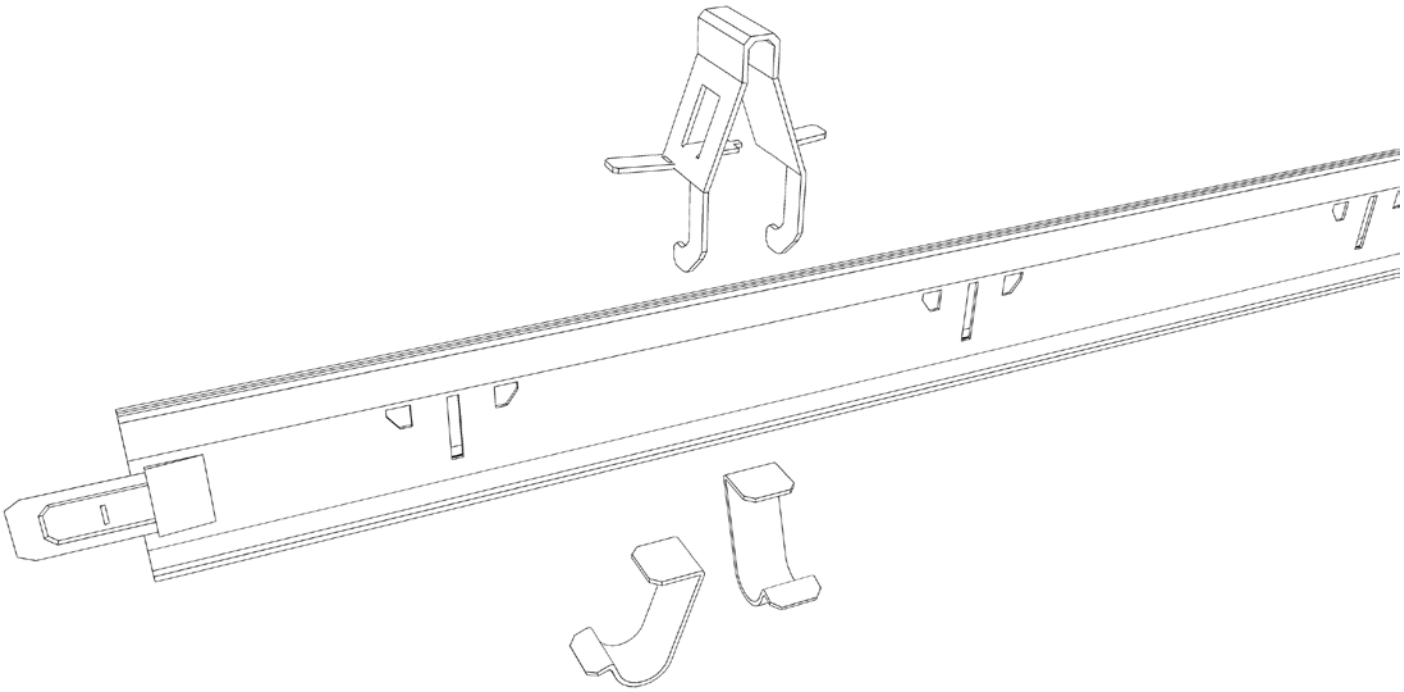

DERAKO®
A Hunter Douglas Company
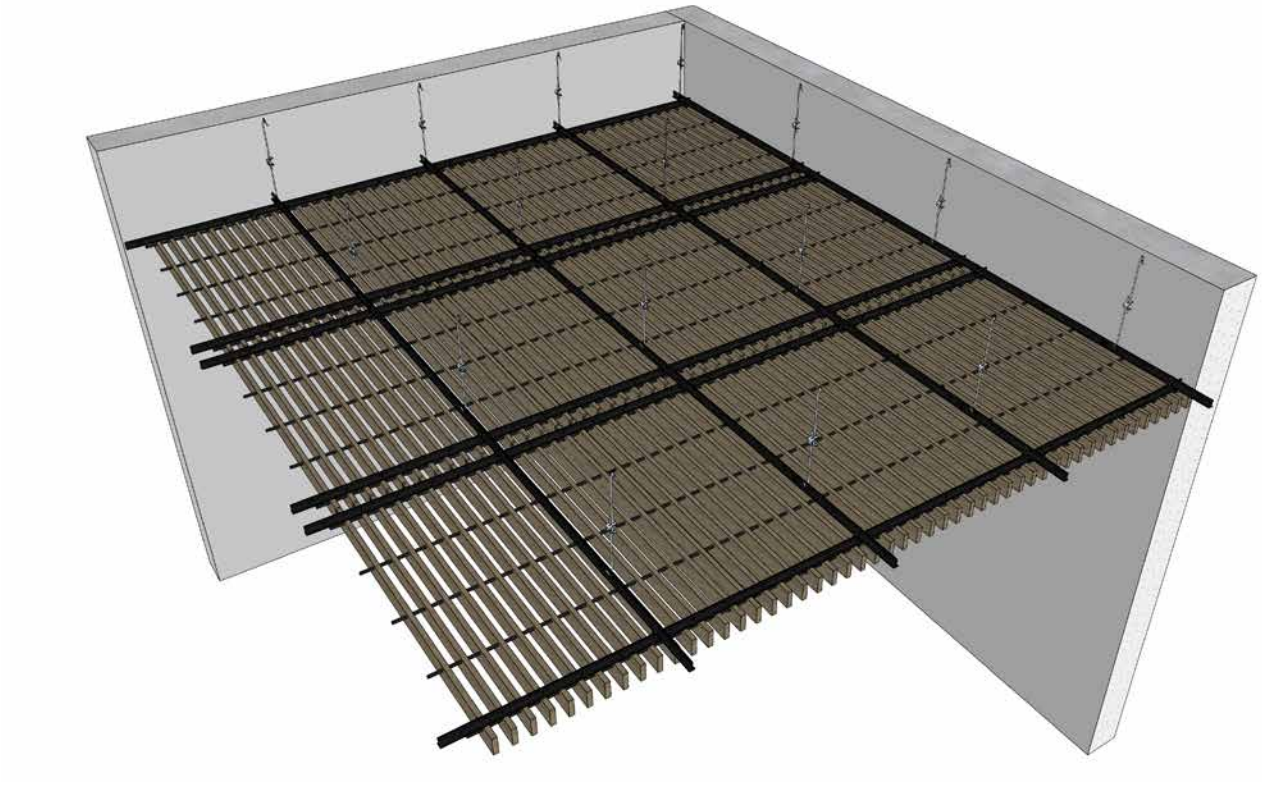
Product details Grill ceiling system